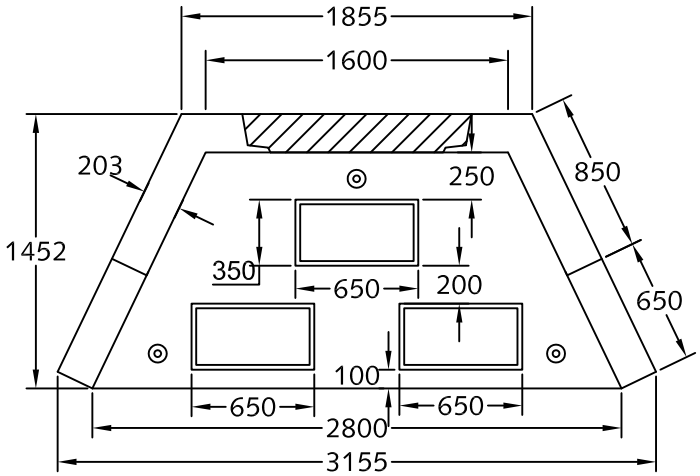

Plan View

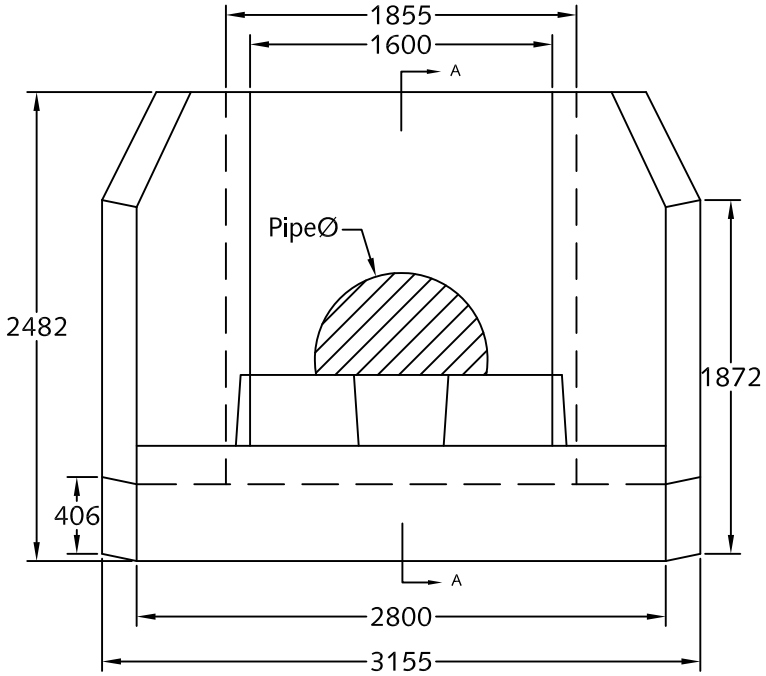

Elevation View

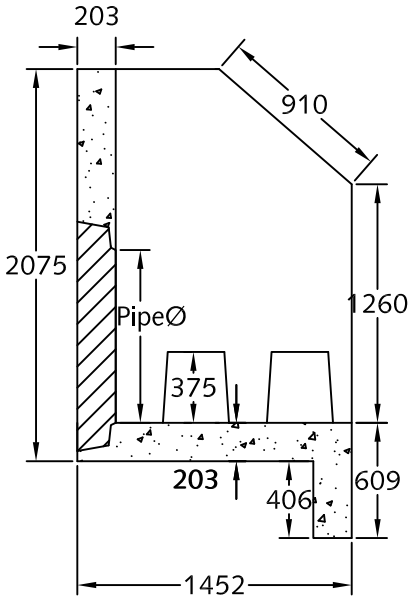

Section A-A

Notes:
1. HW 16-20 to be built as shown.
2. Energy dissipater blocks to be provided as shown.
3. Unit c/w rough cores for inlet/outlet as shown.
4. Suggested for pipe sizes to a maximum of 1200 mm diameter.
4. Structure c/w bolt anchors for grills and handrails.
5. Each unit c/w lifting inserts as required.
6. Approximate weight: 6,500 kg.
7. Minimum rebar yield strength: 414 MPa.
8. Minimum concrete strength: 28 MPa.
9. All dimensions are in millimeters.

THE Langley CONCRETE GROUP
The LANGLEY CONCRETE Group of Companies

DESCRIPTION:

HW 16-20
w/ Energy Dissipator
www.langleyconcretegroup.com

DRAWN BY:	KS	ORIGIN:	CHWK
CHK BY:	JAO/SW	DWG NO:	HW 16-20-ED
DATE:	JAN/07/2010	REV DATE:	1. FEB/04/2010
SCALE:	1:40		

LANGLEY (604) 533-1656 VICTORIA (250) 478-9581 CHILLIWACK 1-800-667-9600

This drawing is the property of the Langley Concrete Group of Companies.
All information contained herein is confidential and may not be used in whole or in part without written permission from the owner