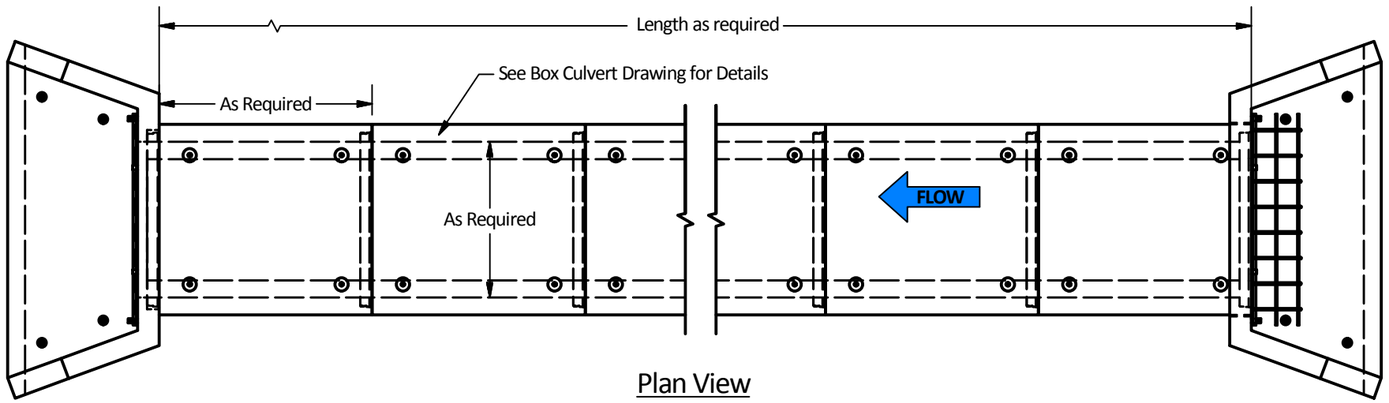

Plan View

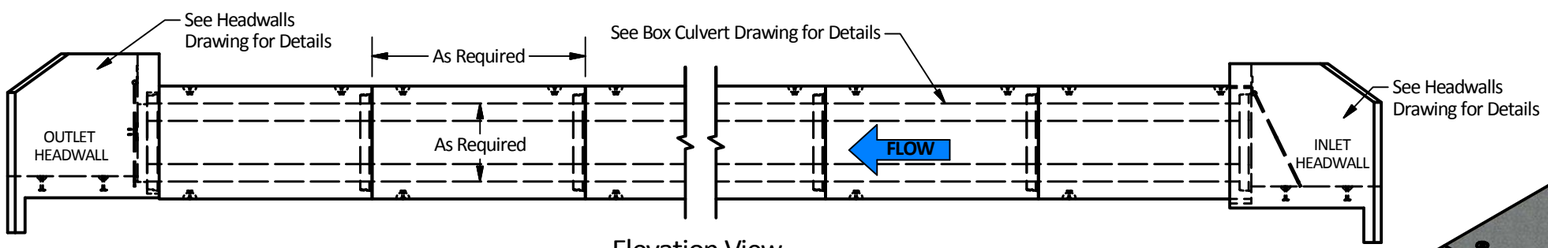

Elevation View

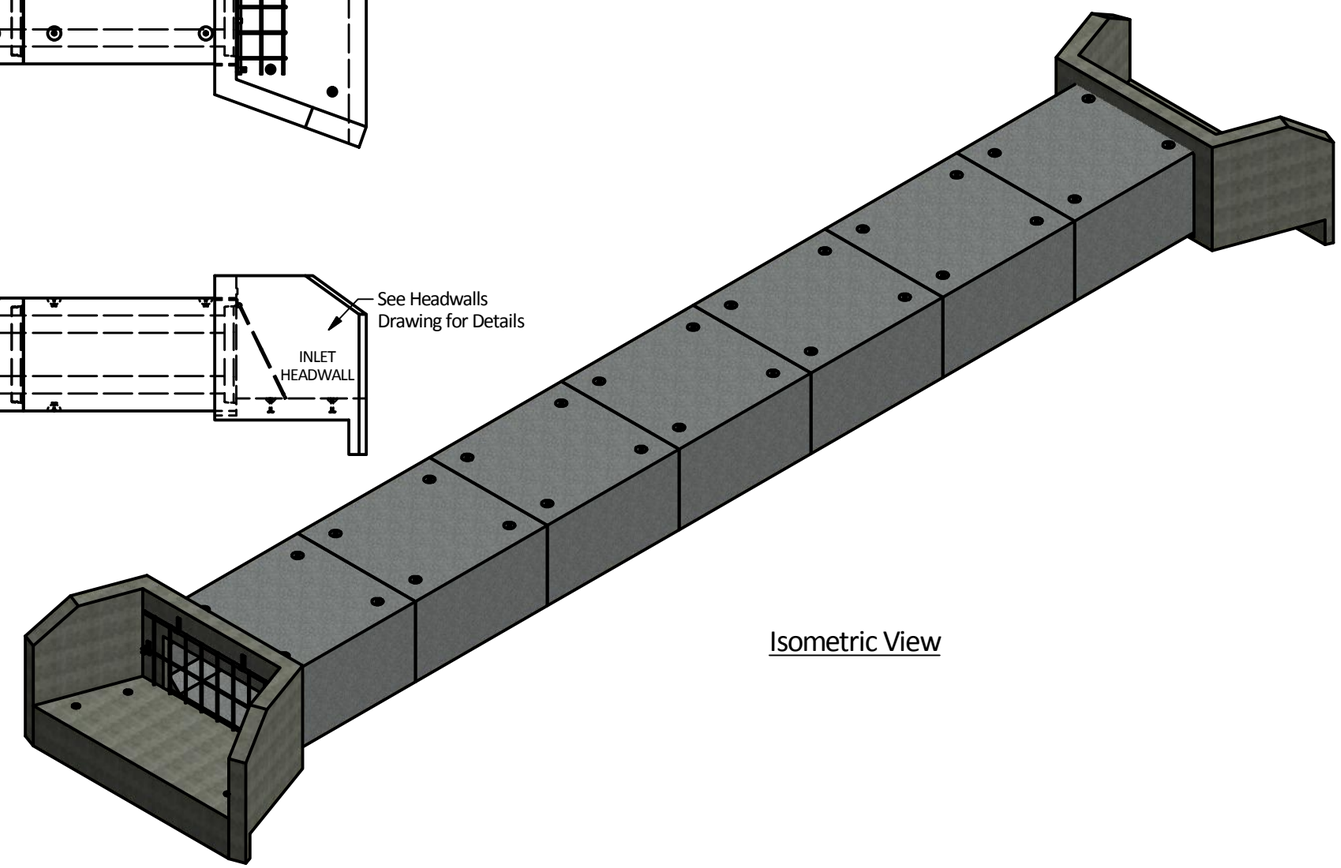

Isometric View

Langley Concrete Group is a certified Q-Cast Plant, an American Concrete Pipe Association Third Party Certificationfor the manufacture of Pipe, Manhole, Box Culvert & Precast Items.

ACPA CERTIFIED PLANT CAST

All Dimensions are in Millimeters.
Unless otherwise Stated

Projection Method:
THIRD ANGLE

This drawing is the property of the Langley Concrete Group of Companies. All information contained herein is confidential and may not be used in whole or in part without written permission from the owner

THE Langley CONCRETE GROUP
www.langleyconcretegroup.com
LANGLEY (604) 533-1656
VICTORIA (250) 478-9581
CHILLIWACK 1-800 667-9600

Quality Assurance of products manufactured by The Langley Concrete Group has been verified by the following third party certification programs

DESCRIPTION:

Box Culvert with Headwall Max

DRAWN BY: SR	JOB NO.
CHK BY: KS	DWG NO: HW-Box
DATE: Aug.09, 2018	
SCALE: 1:70	
SIZE 11 x 17 / REV.	SHEET 1 OF 1