'HEADWALL MAX' SERIES				
Span x Height (m)	Width (m)	Max. Height (m)	Thickness (m)	Weight (kg)
2.1-3.7	2.1	3.7	0.254	15,465
2.6-3.7	2.6	3.7	0.254	17,185
3.1-3.7	3.1	3.7	0.254	18,910
3.6-3.7	3.6	3.7	0.254	20,635
4.1-3.7	4.1	3.7	0.254	22,365
4.6-3.7	4.6	3.7	0.254	24,085
5.1-3.7	5.1	3.7	0.254	25,815

Notes:
1. 'Headwall Max' adjustable large headwall to be built as shown.
2. Backwall height can be manufactured to varying heights as required to suit jobsite conditions. (Maximum 3.7m)
3. Unit will be supplied with openings to accept various size of inlet/outlet pipe, box culvert & other required openings, contact LCG sales department for more details.
4. Structure supplied with embedded threaded inserts for grills and handrails.
5. Bolt-on inlet/outlet grills and handrails are available upon request.
6. Unit supplied with lifting inserts as required.
7. Approximate mass: As shown on the table.
8. Minimum rebar yield strength: 414 MPa.
9. Minimum concrete strength: 35 MPa.
10. All dimensions are in millimeters.

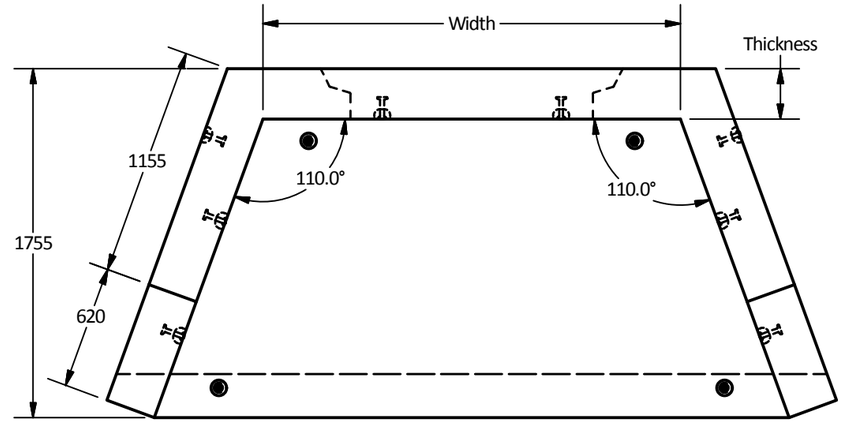

Plan View

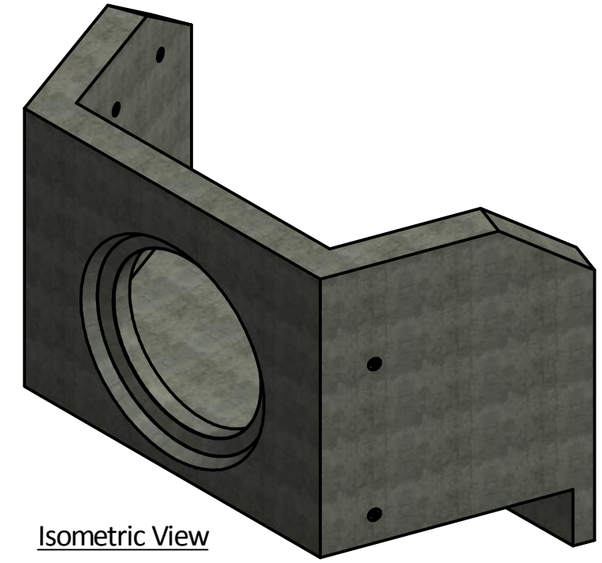

Isometric View

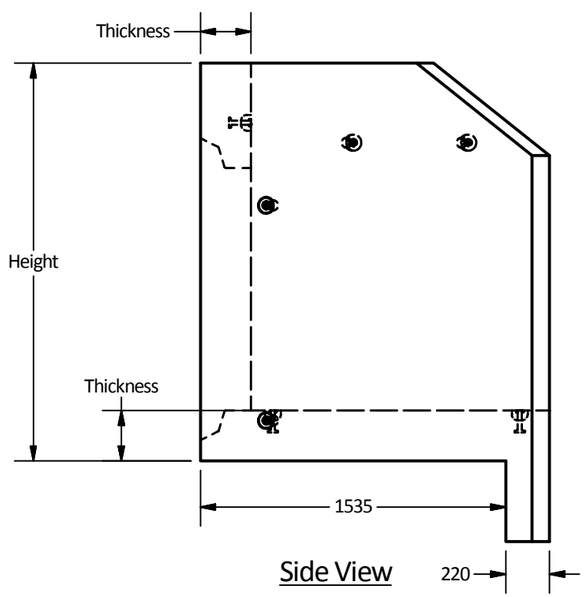

Side View

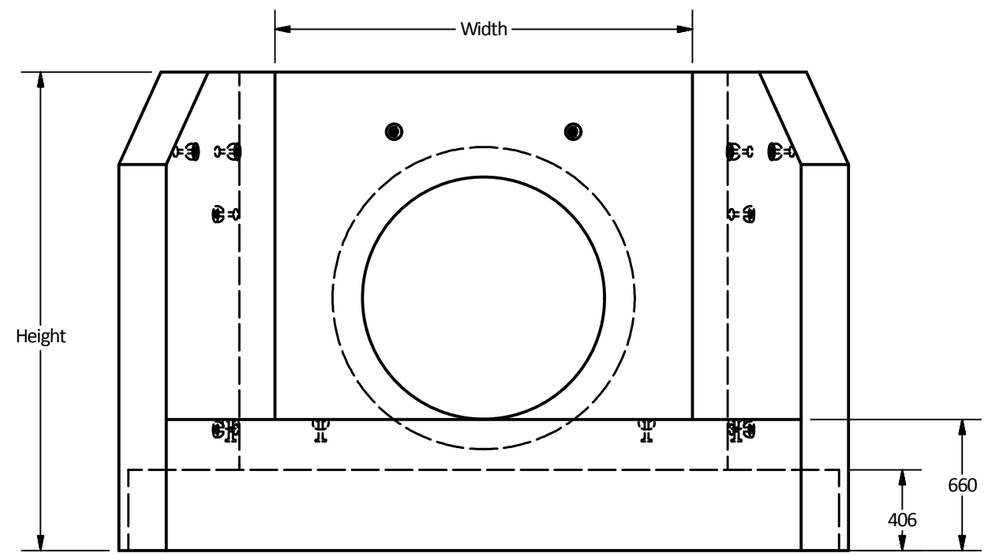

Elevation View

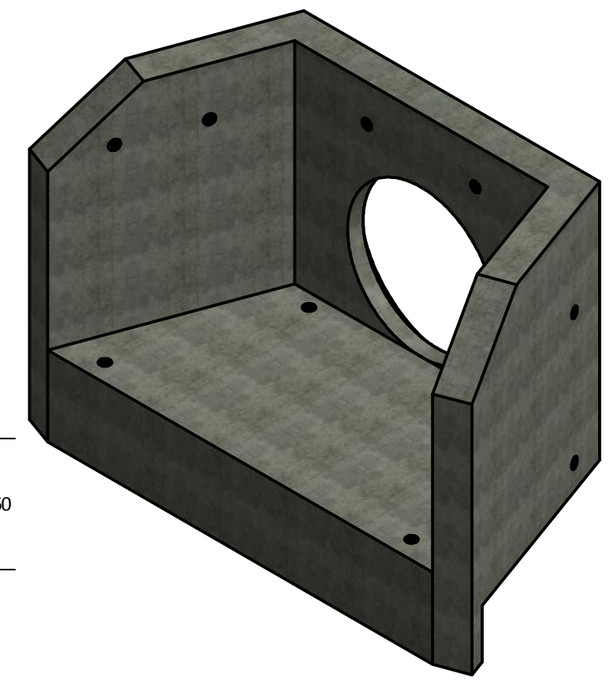

Langley Concrete Group is a certified Q-Cast Plant, an American Concrete Pipe Association Third Party Certificationfor the manufacture of Pipe, Manhole, Box Culvert & Precast Items.

ACPA CERTIFIED PLANT CAST

Quality Assurance of products manufactured by The Langley Concrete Group has been verified by the following third party certification programs

All Dimensions are in Millimeters. Unless otherwise Stated

Projection Method: THIRD ANGLE

THE Langley CONCRETE GROUP
www.langleyconcretegroup.com

LANGLEY (604) 533-1656
VICTORIA (250) 478-9581
CHILLIWACK 1-800 667-9600

DESCRIPTION:

Headwall Max Series
Adjustable Large Headwall
Standard Drawing

DRAWN BY: SR	JOB NO.
CHK BY: KS	DWG NO: HW-Max
DATE: Aug.09, 2018	
SCALE: 1:30	
SIZE 11 x 17 / REV.	SHEET 1 OF 1