PART LIST			
ITEM	QTY	PART NUMBER	WEIGHT
1	1	5212 Vault - Bottom	17,920 kg.
2	1	5212 Vault - Top	15,600 kg.

Notes:
1. 5212 Oil interceptor manufactured to meet AASHTO HS20/BCL-625 live loading.
2. Concrete vault designed for the following earth covers:
- Minimum: 0 m.
- Maximum: 2.5 m.
3. Unit supplied with opening for access as required.
4. Unit supplied with rough cores for inlet/outlet as required.
5. Unit supplied with ladder rungs as required.
6. Unit supplied with lifting insert as required.
7. Oil interceptor c/w 102 mm thick concrete baffles as shown.
8. Unit has a maximum 13,020 liter [13.02 m³] capacity.
9. Minimum rebar yield strength: 414 MPa.
10. Minimum concrete strength: 35 MPa.
11. PVC T required by design, suppled and installed by others in field.
12. All dimensions are in millimeters.

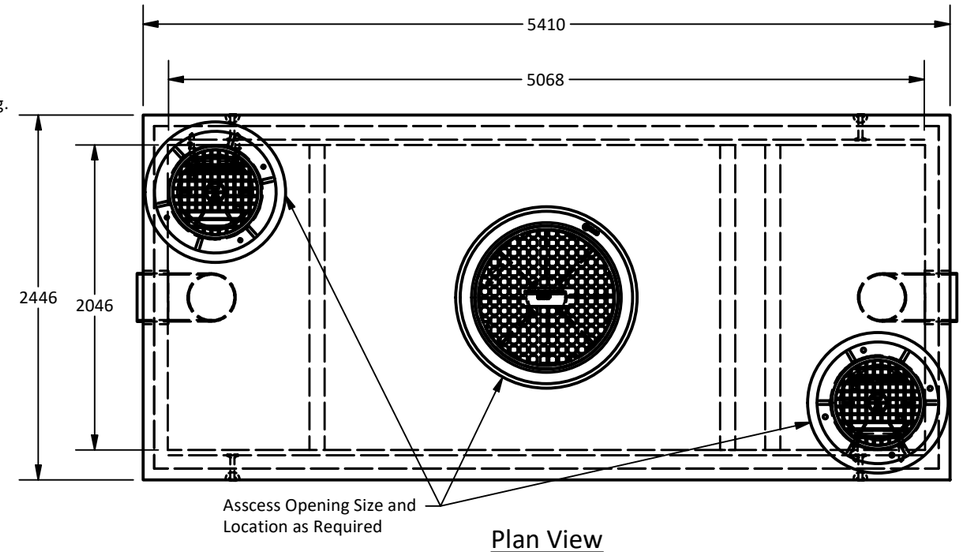

Plan View

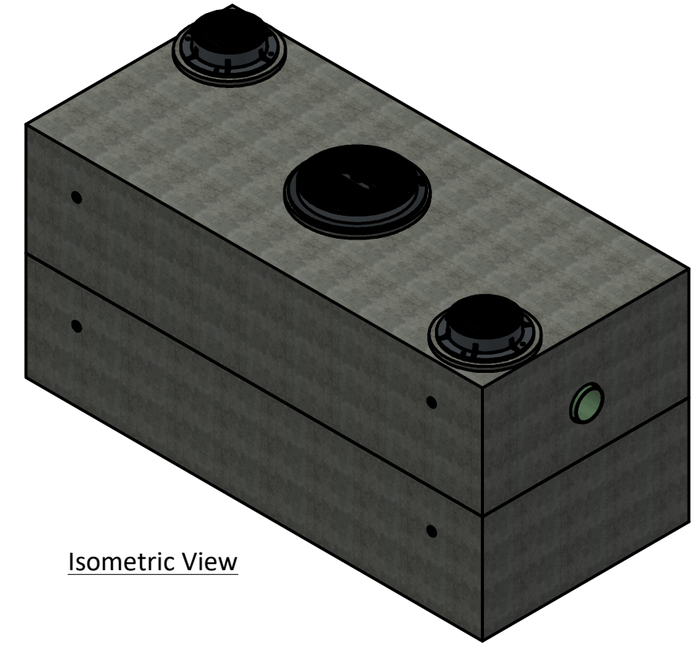

Isometric View

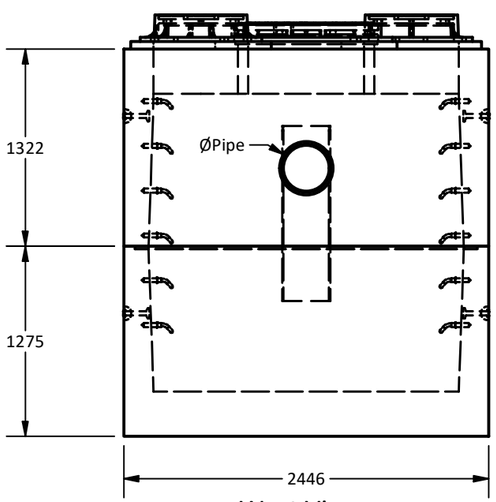

West View

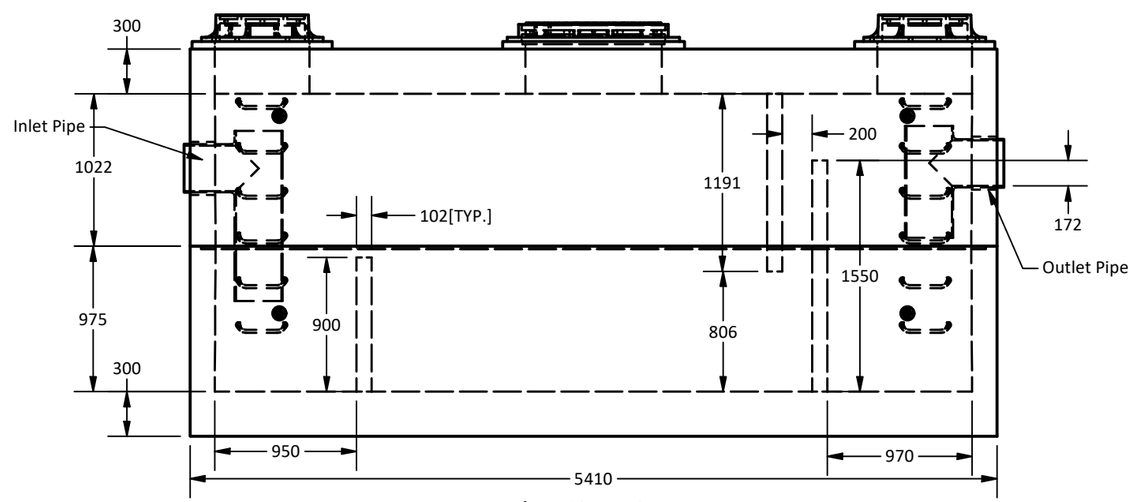

Elevation View

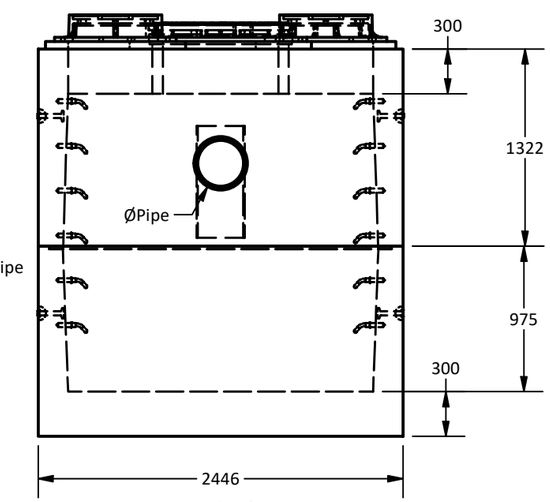

East View

Langley Concrete Group is a certified Q-Cast Plant, an American Concrete Pipe Association Third Party Certificationfor the manufacture of Pipe, Manhole, Box Culvert & Precast Items.

ACPA CERTIFIED PLANT CAST

Quality Assurance of products manufactured by The Langley Concrete Group has been verified by the following third party certification programs

All Dimensions are in Millimeters. Unless otherwise Stated

Projection Method: THIRD ANGLE

THE Langley CONCRETE GROUP
www.langleyconcretegroup.com

LANGLEY (604) 533-1656
VICTORIA (250) 478-9581
CHILLIWACK 1-800 667-9600

DESCRIPTION: 5212 Oil Interceptor [API Style]

DRAWN BY: SR	JOB NO.
CHK BY: KS	DWG NO: 5212-API
DATE: Sep.28, 2018	
SCALE: 1:40	
SIZE 11 x 17 / REV.	SHEET 1 OF 1