PART LIST			
ITEM	QTY	PART NUMBER	WEIGHT
1	1	4212 Vault - Bottom Section	12,300 kg.
2	1	4212 Vault - Top Section	13,810 kg.

Notes:
1. 4212 Reinforced concrete vault is built as shown.
2. Unit designed to withstand AASHTO HS20 / BCL-625 live loading.
3. Concrete vault designed for the following earth covers:
- Minimum: 0 m.
- Maximum: 1.2 m.
4. Unit supplied with rough cores for Inlet/Outlet as required.
5. Unit supplied with opening for access as required.
6. Unit supplied with ladder rungs as required.
7. Unit supplied with lifting insert as required.
8. Minimum rebar yield strength: 414 MPa.
9. Minimum concrete strength: 35 MPa.
10. Vault interior can be supplied with white paint for improved visibility/cleanliness and damproofed exterior using CS-55 or approved equivalent.
11. All dimensions are in millimeters.

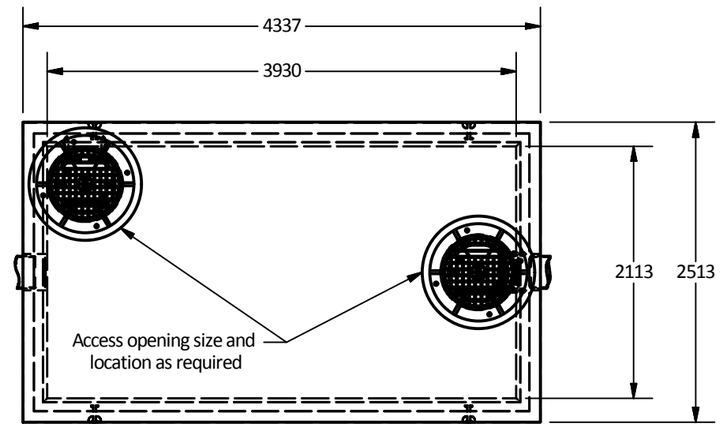

Plan View

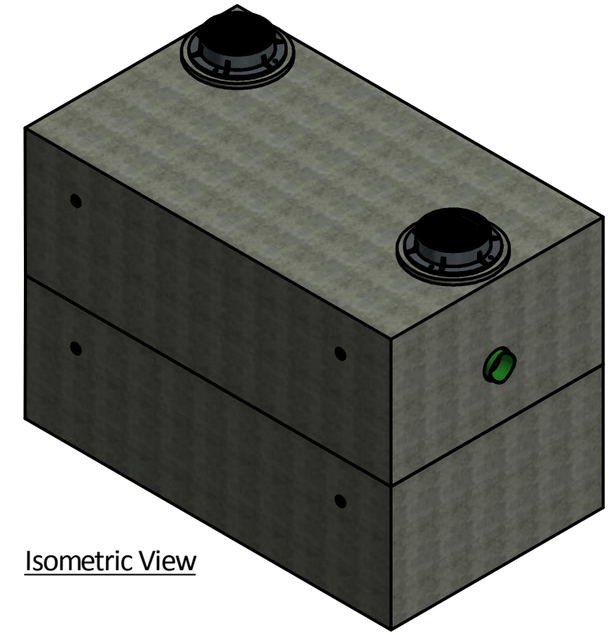

Isometric View

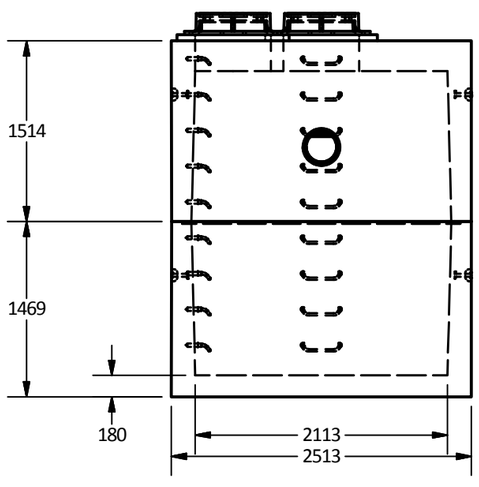

East View

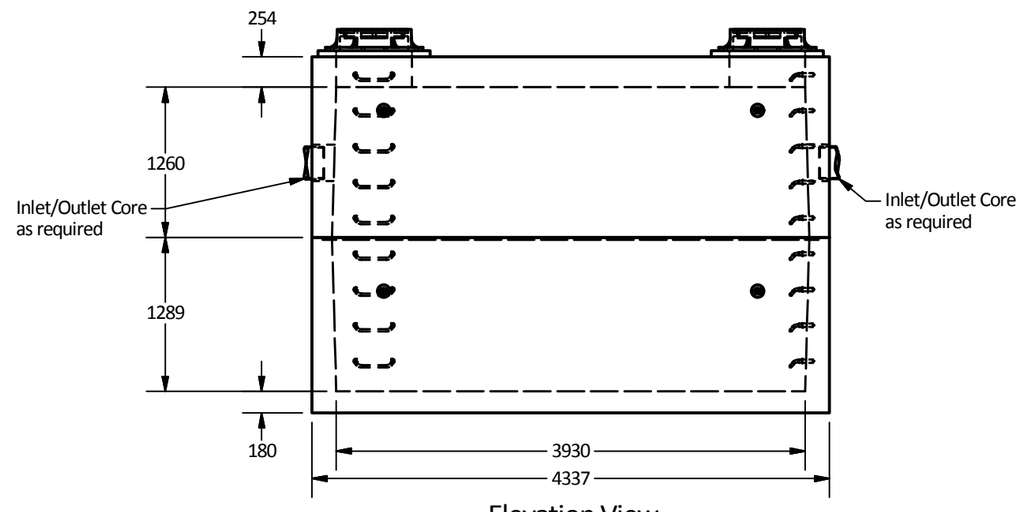

Elevation View

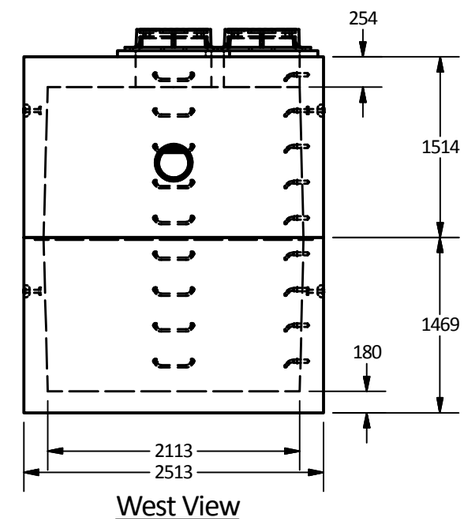

West View

Langley Concrete Group is a certified Q-Cast Plant, an American Concrete Pipe Association Third Party Certificationfor the manufacture of Pipe, Manhole, Box Culvert & Precast Items.

ACPA CERTIFIED PLANT CAST

Quality Assurance of products manufactured by The Langley Concrete Group has been verified by the following third party certification programs

All Dimensions are in Millimeters. Unless otherwise Stated

Projection Method: THIRD ANGLE

THE Langley CONCRETE GROUP
www.langleyconcretegroup.com

LANGLEY (604) 533-1656
VICTORIA (250) 478-9581
CHILLIWACK 1-800 667-9600

DESCRIPTION:

VAULT 4212
Unit Designed for Max Depth of 1.2m
BCL625 Loading

DRAWN BY: SR	JOB NO.
CHK BY: KS	DWG NO: 4212-V
DATE: Aug.10, 2018	
SCALE: 1:50	
SIZE 11 x 17 / REV.	SHEET 1 OF 1