PART LIST			
ITEM	QTY	PART NUMBER	WEIGHT
1	1	1.2 x 1.2 Vault	1,610 kg.
2	1	1.2 x 1.2 Lid	750 kg.

Notes:
1. 1.2 x 1.2 vault is built as shown.
2. Unit designed to withstand AASHTO HS20 / BCL-625 live load.
3. Concrete vault designed for the following earth covers:
- Minimum: 0 m.
- Maximum: 2.5 m.

4. Unit supplied with 4 x 0.39 x 0.31m knockout cores as shown.
5. Unit supplied with 4 x unistrut P3370 as shown.
6.Unit supplied with 2 - 250mm x 250mm sump as shown.
7. Lid supplied with opening for access as required.
8. Unit supplied with lifting insert as required.
9. Minimum rebar yield strength: 414 MPa.
10. Minimum concrete strength: 35 MPa.
11. Vault interior can be supplied with white pain for improved visibility/cleanliness and damproofed exterior using CS-55 or approved equivalent.
12. All dimensions are in millimeters.

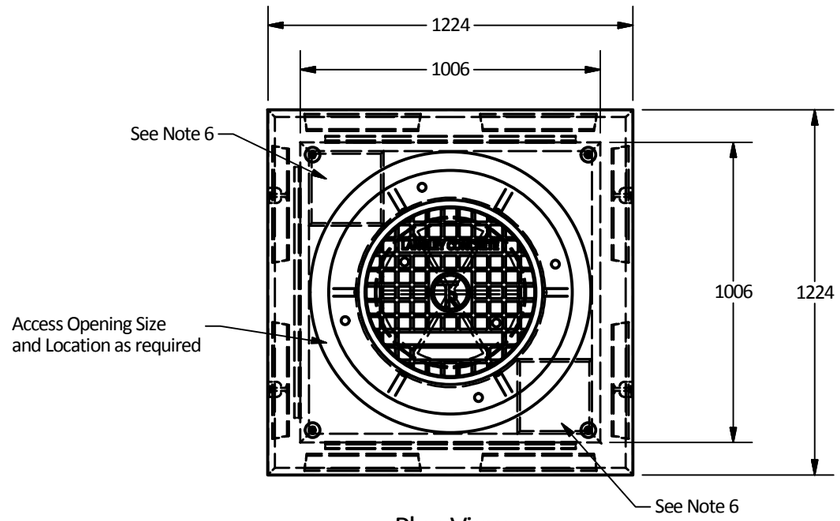

Plan View

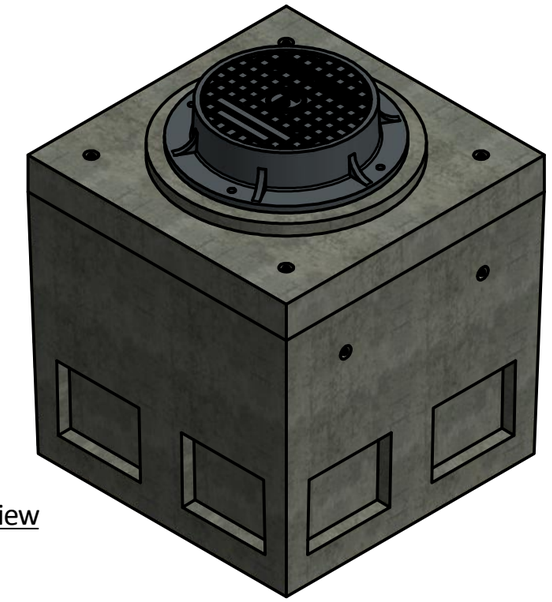

Isometric View

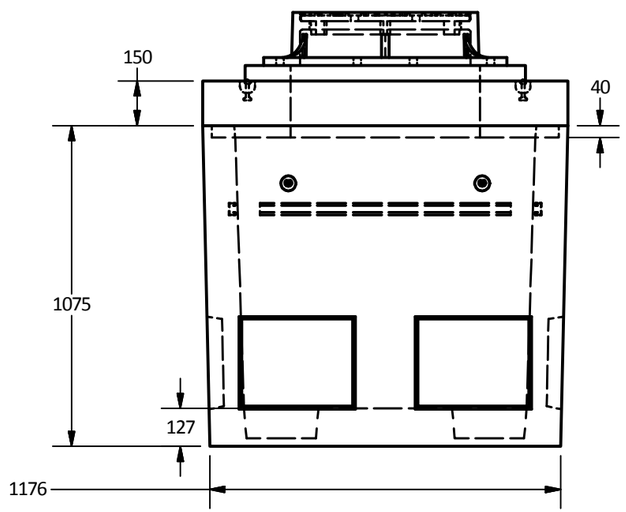

West View

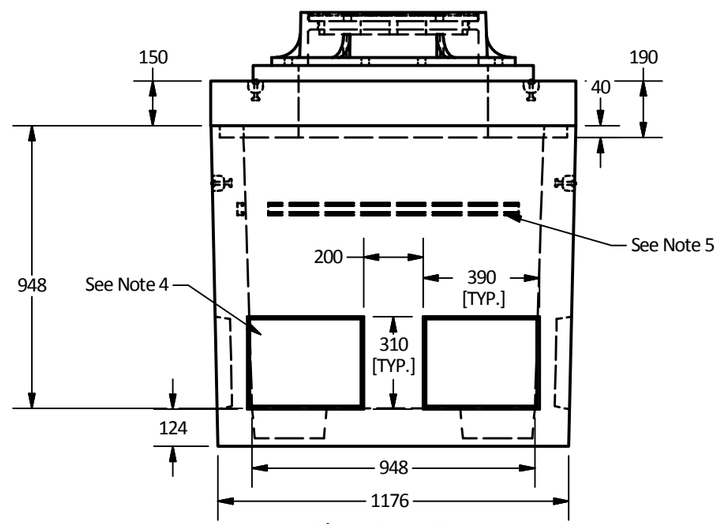

Elevstion View

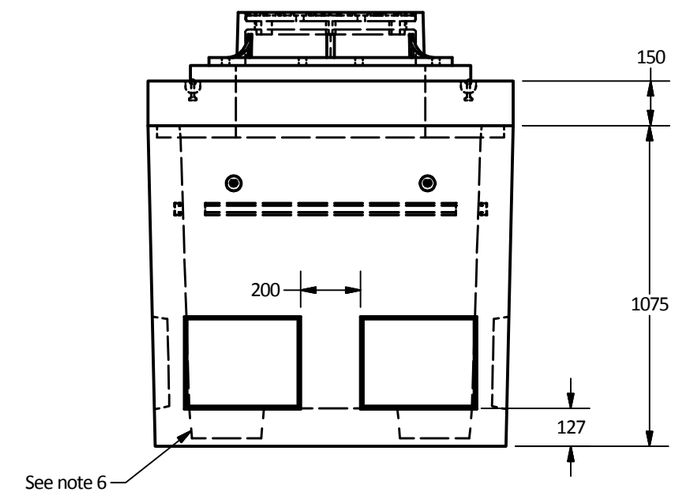

East View

Langley Concrete Group is a certified Q-Cast Plant, an American Concrete Pipe Association Third Party Certificationfor the manufacture of Pipe, Manhole, Box Culvert & Precast Items.

ACPA CERTIFIED PLANT CAST

Quality Assurance of products manufactured by The Langley Concrete Group has been verified by the following third party certification programs

All Dimensions are in Millimeters. Unless otherwise Stated

Projection Method: THIRD ANGLE

THE Langley CONCRETE GROUP
www.langleyconcretegroup.com

LANGLEY (604) 533-1656
VICTORIA (250) 478-9581
CHILLIWACK 1-800 667-9600

DESCRIPTION: Vault 1.2 x 1.2

DRAWN BY: SR	JOB NO.
CHK BY: KS	DWG NO: V 1.2 x 1.2-1.0
DATE: Aug.10, 2018	
SCALE: 1:20	
SIZE 11 x 17 / REV.	SHEET 1 OF 1